AMERICAN SOCIETY FOR MICROBIOLOGY | Journal of Clinical Microbiology

Clinical Microbiology | Full-Length Text

Identifying *Candida auris* transmission in a hospital outbreak investigation using whole-genome sequencing and SNP phylogenetic analysis

Brooks I. Mitchell,[1,2] Kendall Kling,[1,2,3] Maureen K. Bolon,[3,4] Shardul N. Rathod,[4] Michael Malczynski,[2] Javier Ruiz,[2] Wanda Polanco,[2] Kevin Fritz,[2] Sarah Maali,[2] Valentina Stosor,[3] Teresa R. Zembower,[1,2,3,4] Chao Qi[1,2]

AUTHOR AFFILIATIONS See affiliation list on p. 8.

ABSTRACT *Candida auris* poses a global public health challenge, causing multiple outbreaks within healthcare facilities. Despite advancements in strain typing for various infectious diseases, a consensus on the genetic relatedness threshold for identifying *C. auris* transmission in local hospital outbreaks remains elusive. We investigated genetic variations within our local isolate collection using whole-genome-based single nucleotide polymorphism (SNP) phylogenetic analysis. A total of 74 *C. auris* isolates were subjected to whole-genome sequencing (WGS) and SNP phylogenetic analysis via the QIAGEN CLC Genomics Workbench. Isolates included known related strains from the same patient, strains from different hospitals, strains from our hospital patients with no epidemiological link, and 19 patient isolates from a recent *C. auris* outbreak. All but three isolates were identified to be Clade IV. By examining the genetic diversities of *C. auris* within patients and between patients, we identified a SNP variation range of 0–13 for identifying related isolates. During an outbreak investigation, utilizing this range, maximum likelihood phylogenetic analysis revealed two distinct clusters that aligned with the epidemiological links. Determining a SNP variation range to delineate genetic relatedness among isolates is crucial for the application of WGS and SNP phylogenetic analysis in identifying *C. auris* transmission during hospital outbreak investigations. The use of WGS SNP phylogenetic analysis via the CLC Genomics Workbench has emerged as a valuable method for typing *C. auris* in clinical microbiology laboratories.

KEYWORDS WG-SNP, *Candida auris*, strain typing, outbreak, anti-fungal susceptibilities

Candida auris, a rapidly emerging multidrug-resistant yeast, has swiftly evolved into a significant global health threat, owing to its resistance to most antifungal agents, its high transmission potential, and high in-hospital mortality (1–8). Initially discovered in an ear culture in Japan in 2009, this pathogen has since spread to over 47 countries with 5 distinct clades (1–3, 9–11). Controlling the transmission of *C. auris* presents a formidable challenge within hospitals and long-term care facilities, as it demonstrates persistence in the environment, colonization of human nares and skin, formation of resilient biofilms, and resistance to common sanitizing agents such as chlorhexidine and non-alcohol antiseptics (4, 12–14).

Various techniques have been employed for an epidemiological investigation of *C. auris* both regionally and globally. Among these, pulsed-field gel electrophoresis (PFGE), amplified fragment length polymorphism (AFLP), short-tandem repeats (STR), multi-locus sequence typing (MLST), and phage typing have demonstrated inadequate resolution for local outbreak investigation (9, 15–17). Whole-genome sequencing (WGS) followed by single nucleotide polymorphism (SNP) analysis has shown promise in published outbreak investigations but has encountered challenges. While a high degree

Editor Kimberly E. Hanson, University of Utah, Salt Lake City, Utah, USA

Address correspondence to Chao Qi, cqi451@northwestern.edu.

The authors declare no conflict of interest.

Received 5 May 2024
Accepted 31 July 2024
Published 16 September 2024

Copyright © 2024 American Society for Microbiology. All Rights Reserved.

of genetic similarity was observed among isolates within a single hospital, isolates from different body sites of the same patient have shown variations differing by a few SNPs (18, 19). The establishment of a SNP difference range that can be used to identify epidemiologically linked cases remains to be determined.

Our tertiary care medical center implemented *C. auris* screening in 2019, utilizing PCR from nares, groin, and axilla swabs from patients with recent nosocomial exposure. Despite this proactive measure, a *C. auris* outbreak occurred at our institution from September 2023 to December 2023, involving 20 unique patients in our cardiothoracic intensive care unit (CTICU). In this study, leveraging a well-documented collection of *C. auris* isolates with detailed epidemiological information, we evaluated a strain-typing method utilizing WGS and SNP phylogenetic analysis via the CLC Genomics Workbench. We identified a SNP variation range of 0–13 for identifying related isolates and successfully characterized the outbreak strains.

MATERIALS AND METHODS

C. auris isolates

The isolates utilized in this study were obtained from both admission screening and clinical cultures from October 2019 to December 2023. Patients subjected to admission screening included those with prior stays in inpatient rehabilitation facilities (IRFs), long-term acute care hospitals (LTACHs), and ventilator-capable skilled nursing facilities (vSNFs) within 6 months prior to admission. Admission screening criteria also included individuals who received healthcare outside the United States in the prior 6 months from 2019 to 2020 (20). Screening involved the collection of nasal and axilla/groin swabs using ESwab (Copan Diagnostics), followed by testing with a laboratory-developed real-time PCR assay (21). This screening took place across seven hospitals, including Northwestern Memorial Hospital (NMH) and six other community hospitals within the Northwestern Medicine Healthcare System. PCR-positive samples were cultured to recover Candida spp. Isolate identification was performed using Vitek MS Instrument (Biomerieux). Internal transcribed spacer (ITS) sequencing was used to confirm *C. auris* identification when Vitek MS was unable to identify the isolate. These surveillance isolates, along with the isolates recovered from cultures of clinical specimens, were then preserved at −80°C in tryptic soy broth (TSB) with 10% glycerol.

A total of 74 isolates were included in the study: 26 isolates were (35.1%) recovered from surveillance samples, and 48 isolates were (64.9%) from various clinical sources. The clinical sources included urine (n = 15, 31.2%), blood (n = 9, 18.8%), respiratory (n = 16, 33.3%), wound (n = 2, 4.2%), tissue (n = 3, 6.3%), and body fluids (n = 3, 6.3%). Fifteen isolates (20.2%) were from outpatients and patients at non-NMH hospitals. Twenty-eight isolates were obtained from eight patients, each with *C. auris* recovery from more than one clinical sample type in the same year. Specifically, three patients had two positive cultures, two had three positive cultures, one had four positive cultures, one had five positive cultures, and one had seven positive cultures. Twelve (16.2%) isolates were from patients positive upon admission. Nineteen (25.7%) isolates were from patients who underwent outbreak investigation.

WGS

Genomic DNA extract from *C. auris* was carried out with Qiamp miniprep kit (QIAgen, Hilden, German). Illumina DNA Prep kit (San Diego, CA, USA) was used for library construction following the manufacturer's instruction. Multiplexed pair-end sequencing was conducted with Miseq using MiSeq Reagent Kit v3 (600-cycles) or NovaSeq 6000 SP Reagent Kit. The minimal mean coverage of isolates exceeded 50. The sequence data from the outbreak investigation have been submitted to the NCBI Sequence Read Archive (SRA) 21622165.

SNP analyses

The CLC Genomics Workbench 24.0 (QIAgen) microbial workflow "Compare Variants Across Samples" was utilized for SNP detection and phylogenetic tree construction using the default settings. The workflow description and the parameters for SNP calling and SNP tree construction are listed in Table S1. SNPs were identified by aligning short reads to the complete *C. auris* reference genome CA01 as previously described (18). The reference genome is publicly available under the accession number SAMN15689540. Isolate relatedness was assessed based on pairwise SNP matrices and maximum likelihood phylogenetic trees.

Clade analysis

Clade analysis was performed using reference sequences with the known clade identification: *C. auris* PL1 SAMN30096895 (Clade 1, South Asian); *C. auris* CDC B11220 SAMN053796608 (Clade II, East Asian); *C. auris* IITD B11221 SAMN35371556 (Clade III, African); *C. auris* NU CA01 SAMN15689540 (Clade IV, South American). All the 74 study isolates were compared to these reference clade sequences, and a SNP tree was produced using Neighbor Joining analysis.

Outbreak investigation

C. auris bloodstream infections were seen in two patients 1 month apart in July and August 2023 in the CTICU. A hospital-onset case of *C. auris* bloodstream infection was seen in a third patient in September who had been housed in the same inpatient unit with the patient from August. Two rounds of serial unit screening 1 week apart yielded four additional positive cases of *C. auris* colonization, triggering an outbreak investigation. Stringent infection prevention measures, including patient cohorting, unit *C. auris* admission and weekly screening, universal isolation precautions, and hand hygiene and environmental cleanliness monitoring, were implemented. An epidemic curve of the outbreak from December 2023 when the outbreak was declared over revealed that 20 patients were colonized or infected with *C. auris* from July 2023 to December 2023. The genomes of one isolate per patient underwent SNP analysis for tracking *C. auris* transmission.

C. auris susceptibility testing

One isolate per patient included in the outbreak investigation was tested for antifungal susceptibility. These isolates included eight recovered from the axilla, four from the nose, four from the blood, and one from the groin. Minimum inhibitory concentration (MIC) values (in µg/mL) were determined using Sensititre YeastOne YO3IVD AST Plates (Thermo Scientific, Waltham, MA, USA) for fluconazole, itraconazole, voriconazole, caspofungin, micafungin, and flucytosine based on the growth indicated by colorimetric change. *Candida parapsilosis* ATCC 22019 and *Candida krusei* ATCC 6258 were used as quality control strains per the manufacturer's guidelines.

RESULTS

Clade analysis of study isolates

All but three isolates were identified as Clade IV (Fig. S1). Of the three non-Clade IV isolates, two were identified as Clade III and one as Clade I. These three isolates were recovered from patients seeking medical care from out of state. The three non-Clade IV isolates exhibited more than 100,000 SNP differences compared to the Clade IV isolates.

Assessing genetic diversity within patients

Pairwise matrices were constructed for isolates obtained from the same patient (designated isolate group 1). The number of SNPs within a patient ranged from 1 to

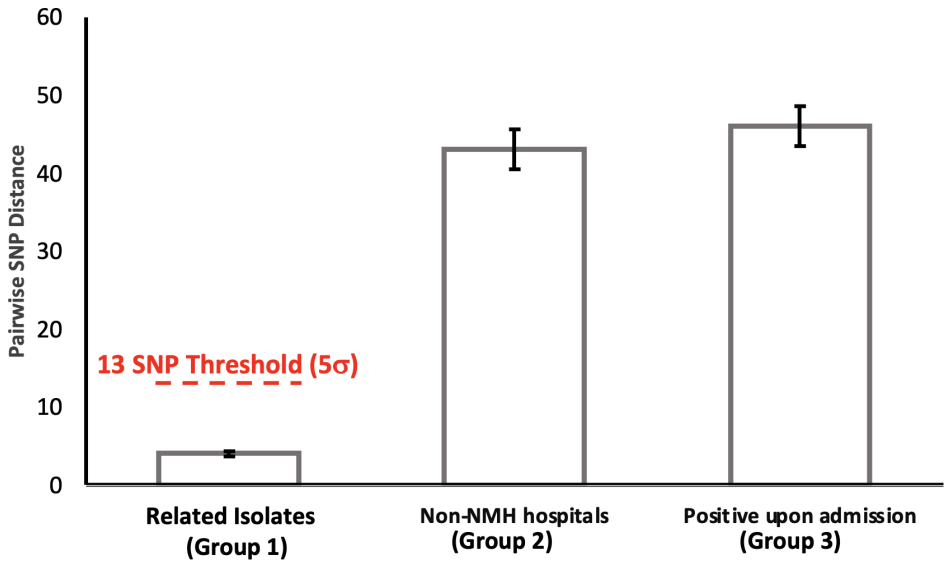

FIG 1 Genetic differences measured by pairwise SNP distance between isolates from the same individuals, non-NMH patients, or patients with *C. auris* colonization or infection upon admission. Boxes indicate mean and 95% confidence interval. Highly distant isolates defined as the isolates with pairwise distance greater than 100 SNPs from others are excluded.

9, with a mean of 3.69 SNPs and a standard deviation of 1.72. When isolates have SNP differences within five standard deviations (up to 13 SNPs), the confidence that these isolates originate from the same source exceeds 99.9%.

When examining the isolates from outpatients and non-NMH patients (designated isolate group 2), pairwise comparisons revealed SNP counts ranging from 20 to 130,976. Similarly, the isolates in group 3 (patients positive upon admission) exhibited SNP counts ranging from 22 to 131,852. The average genetic distances, as determined by pairwise SNP distance, remained notably shorter for related isolates, even when excluding pairwise distances greater than 100 SNPs (Fig. 1). Moreover, none of the isolates in groups 2 and 3 exhibited SNP counts lower than 17. This observation underscores the unlikelihood of shared sourcing among the isolates in groups 2 and 3, a conclusion supported by the absence of epidemiological links among these patients.

Transmission of *C. auris* in CTICU

All 20 patients who were part of the outbreak investigation were housed in the same inpatient medical unit when their first *C. auris* isolate was identified. In addition to the 3 cases of *C. auris* bloodstream infections, 17 patients were identified as colonized with *C. auris*. Subsequently, one of these patients developed a bloodstream infection. Nineteen of the 20 patients produced *C. auris* isolates. We were unable to isolate *C. auris* from one patient sample due to the overgrowth of *Pseudomonas aeruginosa*. Nineteen unique patient isolates were compared through pairwise SNP distance and phylogenetic analysis to determine their relatedness. Maximum likelihood phylogenetic trees revealed 2 distinct clusters, containing 6 and 7 isolates, respectively (Fig. 2). Isolates within each cluster exhibited SNP variations of <13, indicating two separate transmission events. Detailed information on the epidemiological links within each cluster is provided in Table S2. Additionally, six isolates were found to be unrelated both clusters and to each other, displaying SNP variations ranging from 18 to 57.

ASP in the outbreak investigation

Among the 19 isolates recovered during the outbreak investigation, 3 distinct antifungal susceptibility profiles (ASP) were identified (Table 1). Isolates associated with ASP 1 and 2 exhibited elevated fluconazole MICs. Specifically, the fluconazole MICs of isolates

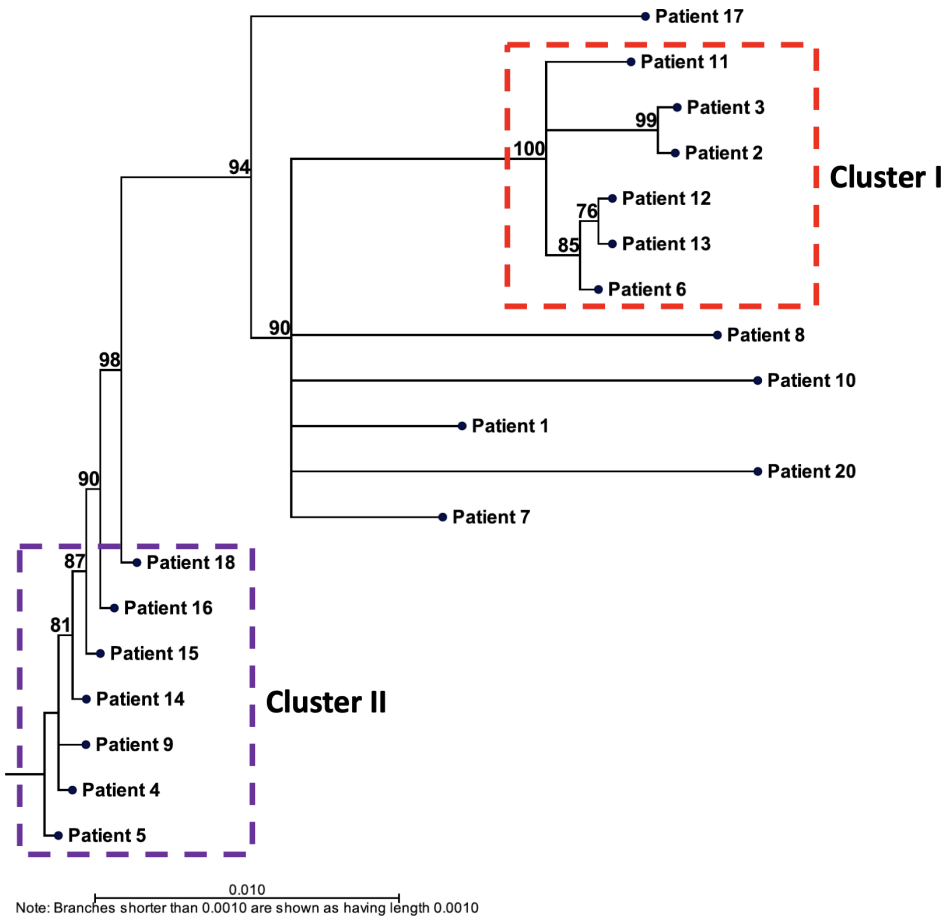

FIG 2 Phylogenetic tree for isolates from the patients involved in *C. auris* CTICU outbreak identifies two genetically related clusters (numbered and boxed by red or purple dash lines). Within Cluster I, pairwise SNP distances range from 0 to 12, while within Cluster II, distances range from 0 to 4. Unrelated isolates (1, 7, 8, 10, 17, 20) exhibit SNP distances ranging from 18 to 57. The SNP distances between isolates of cluster I and cluster II exceed 27.

with ASP 1 ranged from 128 to 256 µg/mL, whereas those of ASP 2 ranged from 64 to >256 µg/mL. Additionally, isolates in ASP 1 displayed elevated voriconazole MICs, while ASP 2 isolates showed elevated MICs for both voriconazole and, in some instances, micafungin. In contrast, the isolates in ASP 3 demonstrated lower fluconazole MICs, ranging from 1 to 8 µg/mL.

Notably, the isolates within cluster 1 shared similar ASP 1 phenotypes, and isolates within cluster 2 shared similar ASP 2 phenotypes.

DISCUSSION

Strain-typing methods, such as STR and AFLP, lack the necessary resolution for investigating outbreaks among organisms that exhibit minimal genetic variation regionally (15–17). In 2020, a short-tandem repeat procedure was developed that was faster and more cost-effective for typing *C. auris,* but lacked resolution when isolates differed by <20 SNPs (17). WGS offers a high-throughput analysis of the entire genome, allowing for phylogenetic analysis based on pairwise SNP distance. This method has proven valuable in investigating *C. auris* transmission (5,19, 22–25). While effective in distinguishing isolates in suspected hospital outbreaks, the precise SNP differences for identifying recent transmission are yet to be established. Our examination of the genetic diversity of *C. auris* within and between patients has identified that a SNP difference of 0–13 is indicative of recent transmission.

TABLE 1 Antifungal susceptibility of isolates involved in CTICU outbreak

Cluster	Outbreak Pt #	Isolate type	Isolate source	Fluconazole MIC	Itraconazole MIC	Voriconazole MIC	Caspofungin MIC	Micafungin MIC	Flucytosine MIC
Cluster I	Pat. 2	Clinical	Blood	256	0.25	4	0.5	0.5	0.25
	Pat. 3	Clinical	Blood	128	0.25	4	0.25	0.25	0.25
	Pat. 6	Screen	Axilla/groin	256	0.25	2	0.25	0.12	0.12
	Pat. 11	Screen	Axilla/groin	256	0.25	4	0.25	0.25	0.12
	Pat. 12	Screen	Axilla/groin	256	0.25	2	0.25	0.25	0.06
	Pat. 13	Screen	Axilla/groin	256	0.25	4	0.25	0.25	0.12
Cluster II	Pat. 4	Screen	Axilla/groin	>256	0.25	8	0.25	0.25	0.12
	Pat. 5	Clinical	Blood	128	0.12	0.5	0.25	8	0.06
	Pat. 9	Screen	Axilla/groin	>256	0.25	8	0.25	0.12	0.12
	Pat. 14	Screen	Axilla/groin	>256	0.25	8	0.5	0.12	0.12
	Pat. 15	Screen	Axilla/groin	>256	0.25	8	0.5	0.12	0.12
	Pat. 16	Screen	Axilla/groin	64	0.12	1	0.5	4	0.12
	Pat. 18	Screen	Axilla/groin	>256	0.25	4	0.5	4	0.12
Unrelated (no cluster)	Pat. 1	Clinical	Blood	4	0.03	0.06	0.06	0.12	0.06
	Pat. 7	Screen	Axilla/groin	8	0.03	0.12	0.25	0.12	0.12
	Pat. 8	Screen	Axilla/groin	8	0.03	0.06	0.25	0.12	0.06
	Pat. 10	Screen	Axilla/groin	2	0.03	0.015	0.25	0.06	0.06
	Pat. 17	Screen	Axilla/groin	8	0.06	0.12	0.25	0.12	0.12
	Pat. 20	Screen	Axilla/groin	4	0.03	0.03	0.12	0.12	0.06

In 2021, our laboratory conducted a WGS comparison involving 20 isolates from 14 distinct patients, comparing them against strains from another institution and Clade IV CDC strains (18). The results revealed that all regional strains belonged to Clade IV and displayed phylogenetic distinctiveness from the CDC's Clade IV strains. However, due to insufficient data on the genetic diversity of *C. auris* isolates within individual patients and among epidemiologically unrelated patients, the study could not establish a SNP variation range that would enable differentiation between nosocomial and non-nosocomial isolate pairs (18). These findings highlight the inadequacy of Clade-level identification for outbreak analysis, given the high genetic resemblance among regional *C. auris* isolates, emphasizing the need for a typing system capable of achieving higher resolution.

SNP analyses for fungal genomes, including *C. auris*, are still under validation. Although several methods for variant calling have been published, typically using pipelines such as GATK or SAMtools (19, 22–24), a comparative analysis of these pipelines for *C. auris* revealed that while they generally produce accurate phylogenetic relationships, significant discrepancies can occur due to differences in variant calling, trimming, and filtering steps (25). For phylogenetic investigations, it is preferable to select a reference genome from the same Clade as the outbreak (25). However, many studies have used a Clade I reference genome, despite most *C. auris* strains in the Chicagoland area belonging to Clade IV (26, 27).

The literature indicates that isolates from different clades exhibit substantial SNP differences. Outbreak studies comparing SNP differences between clades have reported variations ranging from 20,000 to over 200,000 SNPs, while unrelated isolates within the same clade typically show SNP differences ranging from 6 to 960 SNPs (5, 28–31). Consistent with previous literature, all isolates in our outbreak belonged to Clade IV and exhibited SNP variation ranging from 1 to 57 differences, whereas differences between Clade IV and non-Clade IV isolates exceeded 100,000 SNPs.

As our outbreak strains were all from Clade IV, the SNP variation range for identifying related isolates may not be applicable to other clades. Our analysis used a Clade IV reference strain specifically selected to represent the local circulating *C. auris* population. Choosing a reference strain from the locally circulating population is crucial to ensure accurate SNP analysis and differentiation of closely related isolates. An incomplete reference genome could result in reduced discriminatory power.

Our laboratory successfully evaluated a strain-typing method for *C. auris* using a single SNP phylogeny via the CLC Genomics Workbench, employing a local Clade IV reference genome from 2019. A previous study in 2020 also effectively utilized the CLC Genomics Workbench to type six *C. auris* strains in an outbreak through SNP and k-mer analysis, though investigators did not propose a SNP threshold (11). We established a SNP variation range of 0–13 for transmission identification based on several factors. First, SNP variations observed between isolates from the same patient (Group 1) showed variations of no more than 9. Second, isolates from outpatients and other hospital systems, which were not expected to be related, showed SNP variations ranging from 20 to 130,000, with none having SNP differences of 13 or less. Applying this SNP range to the *C. auris* outbreak in our CTICU revealed two distinct clusters aligning well with the epidemiological links. Our experience suggests that several factors should be considered when determining an SNP range for identifying transmission events within an institution, including the specific outbreak context, the isolate collection, the reference genome, and the analysis protocol.

Our strain-typing methodology is notably more user-friendly in a clinical laboratory setting. The CLC Genomics Workbench simplifies phylogenetic analysis, rendering it suitable for clinical microbiology laboratories, particularly those with limited bioinformatics resources for complex sequencing analyses.

While the Clinical and Laboratory Standards Institute (CLSI) is yet to establish MIC breakpoints for resistance in *C. auris*, the CDC has proposed tentative breakpoints for fluconazole, amphotericin, and micafungin at ≥32, ≥2, and ≥4 μg/mL, respectively

(10). According to these tentative breakpoints, *C. auris* isolates are reportedly 90% resistant to fluconazole, 30% to amphotericin, and 5% to echinocandins (14). However, our observations revealed a variable ASP among the studied isolates, ranging from pan-susceptible to resistant across two classes of antifungal agents. Our phylogenetic analysis showed that clustered isolates shared similar ASP profiles; however, the ASP profile alone is not sufficient to determine molecular strain relatedness.

Our study has several limitations. First, all known related isolates were sourced from the Chicagoland area. While a SNP variation range of 0–13 may be applicable to local isolates, the extent of strain variation in other regions of the US with high *C. auris* prevalence, such as New York and Florida, remains unknown. Further validation studies are needed to determine whether this range applies to other regions. Nonetheless, our methods offer a framework for microbiology laboratories involved in *C. auris* outbreak investigations, allowing them to use local reference genomes and establish their own regional SNP thresholds. Additionally, it is important to note that structural variations, such as InDels, are common across *C. auris* isolates and may result in significant clinical phenotype differences. However, SNP analysis cannot detect large DNA rearrangements. This limitation is likely minimized in our study, as the isolates were collected from a single hospital over a short period, reducing the likelihood of large genome rearrangements.

In summary, our study demonstrates the efficacy of WGS and SNP phylogenetic analysis in identifying *C. auris* transmission during a hospital outbreak. By using our local isolate collection and examining the genetic diversity of *C. auris* within and between patients, we established a SNP variation range of 0–13 for identifying recent transmission events. Our study offers a framework for *C. auris* typing using WGS SNP phylogenetic analysis to support outbreak investigations.

ACKNOWLEDGMENTS

We would like to thank the staff at ACL Laboratories, the Department of Infection Prevention at Northwestern Memorial Hospital, and the Clinical Microbiology Laboratory for their valuable contributions to this study.

AUTHOR AFFILIATIONS

[1]Department of Pathology, Northwestern University Feinberg School of Medicine, Chicago, Illinois, USA
[2]Clinical Microbiology Laboratory, Northwestern Memorial Hospital, Chicago, Illinois, USA
[3]Department of Medicine, Division of Infectious Diseases, Northwestern University Feinberg School of Medicine, Chicago, Illinois, USA
[4]Department of Healthcare Epidemiology and Infection Prevention, Northwestern Memorial Hospital, Chicago, Illinois, USA

AUTHOR ORCIDs

Chao Qi http://orcid.org/0000-0003-0741-3070

ADDITIONAL FILES

The following material is available online.

Supplemental Material

Supplemental material (JCM00680-24-s0001.docx). Figure S1; Tables S1 and S2.

REFERENCES

1. Satoh K, Makimura K, Hasumi Y, Nishiyama Y, Uchida K, Yamaguchi H. 2009. *Candida auris* sp. nov., a novel ascomycetous yeast isolated from the external ear canal of an inpatient in a Japanese hospital. Microbiol Immunol 53:41–44. https://doi.org/10.1111/j.1348-0421.2008.00083.x
2. Vallabhaneni S, Kallen A, Tsay S, Chow N, Welsh R, Kerins J, Kemble SK, Pacilli M, Black SR, Landon E, et al. 2013. Investigation of the first seven reported cases of *Candida auris*, a globally emerging invasive, multidrug-resistant fungus — United States, May 2013–August 2016. MMWR Morb

Mortal Wkly Rep 65:1234–1237. https://doi.org/10.15585/mmwr.mm6544e1
3. Chen J, Tian S, Han X, Chu Y, Wang Q, Zhou B, Shang H. 2020. Is the superbug fungus really so scary? A systematic review and meta-analysis of global epidemiology and mortality of *Candida auris*. BMC Infect Dis 20:827. https://doi.org/10.1186/s12879-020-05543-0
4. Ahmad S, Alfouzan W. 2021. *Candida auris*: epidemiology, diagnosis, pathogenesis, antifungal susceptibility, and infection control measures to combat the spread of infections in healthcare facilities. Microorganisms 9:807. https://doi.org/10.3390/microorganisms9040807
5. Lockhart SR, Etienne KA, Vallabhaneni S, Farooqi J, Chowdhary A, Govender NP, Colombo AL, Calvo B, Cuomo CA, Desjardins CA, Berkow EL, Castanheira M, Magobo RE, Jabeen K, Asghar RJ, Meis JF, Jackson B, Chiller T, Litvintseva AP. 2017. Simultaneous emergence of multidrug-resistant *Candida auris* on 3 continents confirmed by whole-genome sequencing and epidemiological analyses. Clin Infect Dis 64:134–140. https://doi.org/10.1093/cid/ciw691
6. Sharma M, Chakrabarti A. 2020. On the origin of *Candida auris*: ancestor, environmental stresses, and antiseptics. mBio 11:e02102-20. https://doi.org/10.1128/mBio.02102-20
7. Khan Z, Ahmad S. 2017. *Candida auris*: an emerging multidrug-resistant pathogen of global significance. Curr Med Res Pract 7:240–248. https://doi.org/10.1016/j.cmrp.2017.11.004
8. Chowdhary A, Sharma C, Meis JF. 2017. *Candida auris*: a rapidly emerging cause of hospital-acquired multidrug-resistant fungal infections globally. PLoS Pathog 13:e1006290. https://doi.org/10.1371/journal.ppat.1006290
9. Jeffery-Smith A, Taori SK, Schelenz S, Jeffery K, Johnson EM, Borman A, Manuel R, Brown CS, *Candida auris* Incident Management Team. 2018. *Candida auris*: a review of the literature. Clin Microbiol Rev 31:e00029-17. https://doi.org/10.1128/CMR.00029-17
10. Centers for Disease Control. 2024. Tracking *Candida auris*.
11. Price TK, Mirasol R, Ward KW, Dayo AJ, Hilt EE, Chandrasekaran S, Garner OB, de St Maurice A, Yang S. 2021. Genomic characterizations of clade III lineage of *Candida auris*, California, USA. Emerg Infect Dis 27:1223–1227. https://doi.org/10.3201/eid2704.204361
12. Fu L, Le T, Liu Z, Wang L, Guo H, Yang J, Chen Q, Hu J. 2020. Different efficacies of common disinfection methods against *Candida auris* and other *Candida* species. J Infect Public Health 13:730–736. https://doi.org/10.1016/j.jiph.2020.01.008
13. Hayden MK, Dangana TE, Yelin RD, Schoeny M, Bell PB, Stanley M, Preite N, Khan N, Edomwande O, Black SR, Pacilli M, Huang X, Deming C, Lin MY, Segre JA. 2019. 897. Prevalence of *Candida auris* at body sites, characterization of skin microbiota, and relation of chlorhexidine gluconate (CHG) skin concentration to *C. auris* detection among patients at a high-prevalence ventilator-capable skilled nursing facility (vSNF) with established CHG bathing. Open Forum Infect Dis 6:S25–S26. https://doi.org/10.1093/ofid/ofz359.056
14. Pallotta F, Viale P, Barchiesi F. 2023. Candida auris: the new fungal threat. Infez Med 31:323–328.
15. Prakash A, Sharma C, Singh A, Kumar Singh P, Kumar A, Hagen F, Govender NP, Colombo AL, Meis JF, Chowdhary A. 2016. Evidence of genotypic diversity among *Candida auris* isolates by multilocus sequence typing, matrix-assisted laser desorption ionization time-of-flight mass spectrometry and amplified fragment length polymorphism. Clin Microbiol Infect 22:277. https://doi.org/10.1016/j.cmi.2015.10.022
16. Schelenz S, Hagen F, Rhodes JL, Abdolrasouli A, Chowdhary A, Hall A, Ryan L, Shackleton J, Trimlett R, Meis JF, Armstrong-James D, Fisher MC. 2016. First hospital outbreak of the globally emerging *Candida auris* in a European hospital. Antimicrob Resist Infect Control 5:35. https://doi.org/10.1186/s13756-016-0132-5
17. de Groot T, Puts Y, Berrio I, Chowdhary A, Meis JF. 2020. Development of *Candida auris* short tandem repeat typing and its application to a global collection of isolates. mBio 11:e02971-19. https://doi.org/10.1128/mBio.02971-19
18. Roberts SC, Zembower TR, Ozer EA, Qi C. 2021. Genetic evaluation of nosocomial *Candida auris* transmission. J Clin Microbiol 59:e02252-20. https://doi.org/10.1128/JCM.02252-20
19. Eyre DW, Sheppard AE, Madder H, Moir I, Moroney R, Quan TP, Griffiths D, George S, Butcher L, Morgan M, Newnham R, Sunderland M, Clarke T, Foster D, Hoffman P, Borman AM, Johnson EM, Moore G, Brown CS, Walker AS, Peto TEA, Crook DW, Jeffery KJM. 2018. A *Candida auris* outbreak and its control in an intensive care setting. N Engl J Med 379:1322–1331. https://doi.org/10.1056/NEJMoa1714373
20. Interim guidance for a public health response to contain novel or targeted multidrug-resistant organisms (MDROs). Centers for Diseases Control. https://www.cdc.gov/hai/pdfs/mdro-guides/Health-Response-Contain-MDRO-508.pdf.
21. Malczynski M, Dowllow N, Rezaeian S, Rios J, Dirnberger L, Zembower JA, Zhu A, Qi C. 2020. Optimizing a real-time PCR assay for rapid detection of *Candida auris* in nasal and axillary/groin samples. J Med Microbiol 69:824–829. https://doi.org/10.1099/jmm.0.001207
22. Chow NA, Gade L, Tsay SV, Forsberg K, Greenko JA, Southwick KL, Barrett PM, Kerins JL, Lockhart SR, Chiller TM, et al. 2018. Multiple introductions and subsequent transmission of multidrug-resistant *Candida auris* in the USA: a molecular epidemiological survey. Lancet Infect Dis 18:1377–1384. https://doi.org/10.1016/S1473-3099(18)30597-8
23. Rhodes J, Abdolrasouli A, Farrer RA, Cuomo CA, Aanensen DM, Armstrong-James D, Fisher MC, Schelenz S. 2018. Author correction: genomic epidemiology of the UK outbreak of the emerging human fungal pathogen *Candida auris*. Emerg Microbes Infect 7:104. https://doi.org/10.1038/s41426-018-0098-x
24. Gorzalski A, Ambrosio FJ III, Massic L, Scribner MR, Siao DD, Hua C, Dykema P, Schneider E, Njoku C, Libuit K, Sevinsky JR, Van Hooser S, Pandori M, Hess D. 2023. The use of whole-genome sequencing and development of bioinformatics to monitor overlapping outbreaks of *Candida auris* in southern Nevada. Front Public Health 11:1198189. https://doi.org/10.3389/fpubh.2023.1198189
25. Li X, Muñoz JF, Gade L, Argimon S, Bougnoux M-E, Bowers JR, Chow NA, Cuesta I, Farrer RA, Maufrais C, et al. 2023. Comparing genomic variant identification protocols for *Candida auris*. Microb Genom 9:1–19. https://doi.org/10.1099/mgen.0.000979
26. Sexton DJ, Bentz ML, Welsh RM, Derado G, Furin W, Rose LJ, Noble-Wang J, Pacilli M, McPherson TD, Black S, Kemble SK, Herzegh O, Ahmad A, Forsberg K, Jackson B, Litvintseva AP. 2021. Positive correlation between *Candida auris* skin-colonization burden and environmental contamination at a ventilator-capable skilled nursing facility in Chicago. Clin Infect Dis 73:1142–1148. https://doi.org/10.1093/cid/ciab327
27. Proctor DM, Dangana T, Sexton DJ, Fukuda C, Yelin RD, Stanley M, Bell PB, Baskaran S, Deming C, Chen Q, et al. 2021. Integrated genomic, epidemiologic investigation of *Candida auris* skin colonization in a skilled nursing facility. Nat Med 27:1401–1409. https://doi.org/10.1038/s41591-021-01383-w
28. Sharma C, Kadosh D. 2023. Perspective on the origin, resistance, and spread of the emerging human fungal pathogen *Candida auris*. PLoS Pathog 19:e1011190. https://doi.org/10.1371/journal.ppat.1011190
29. de St Maurice A, Parti U, Anikst VE, Harper T, Mirasol R, Dayo AJ, Garner OB, Prabaker KK, Yang S. 2023. Clinical, microbiological, and genomic characteristics of clade-III *Candida auris* colonization and infection in southern California, 2019–2022. Infect Control Hosp Epidemiol 44:1093–1101. https://doi.org/10.1017/ice.2022.204
30. Alanio A, Snell HM, Cordier C, Desnos-Olivier M, Dellière S, Aissaoui N, Sturny-Leclère A, Da Silva E, Eblé C, Rouveau M, Thégat M, Zebiche W, Lafaurie M, Denis B, Touratier S, Benyamina M, Dudoignon E, Hamane S, Cuomo CA, Dépret F. 2022. First patient-to-patient intrahospital transmission of clade I *Candida auris* in france revealed after a two-month incubation period. Microbiol Spectr 10:e0183322. https://doi.org/10.1128/spectrum.01833-22
31. Spruijtenburg B, Badali H, Abastabar M, Mirhendi H, Khodavaisy S, Sharifisooraki J, Taghizadeh Armaki M, de Groot T, Meis JF. 2022. Confirmation of fifth *Candida auris* clade by whole genome sequencing. Emerg Microbes Infect 11:2405–2411. https://doi.org/10.1080/22221751.2022.2125349